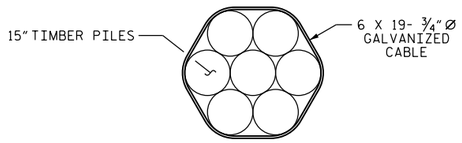

DETAIL OF 7-PILE CLUSTER (DOLPHINS)

PILES 15' FROM ENDS OF FENDER SYSTEM

IN THE 7-PILE CLUSTER (DOLPHINS), THE CENTER PILE SHALL BE DRIVEN VERTICALLY; AND THE SIX OUTSIDE PILES SHALL BE DRIVEN ON A 1½:12 BATTER WITH THE FINAL POSITION OF THE TOP OF THE PILE BEING AS CLOSE AS POSSIBLE TO THE TOP OF THE CENTER PILE. THE PILES SHALL BE DRAWN TOGETHER AT THE TOP AND WRAPPED WITH FIVE TURNS OF ¾"Ø WIRE ROPE AT THREE POINTS. THE WIRE ROPE SHALL BE SECURED WITH TWO CABLE CLAMPS AT EACH END AND WITH ONE ⅜"Ø X4" STAPLE PER TURN PER PILE. FASTENINGS SHALL BE GALVANIZED.

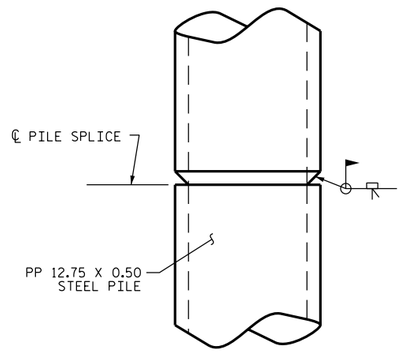

PIPE PILE SPLICE DETAIL

STRUCTURAL STEEL					
ITEM	UNIT	LENGTH	SIZE	NO.	TOTAL
STEEL PIPE PILES	LIN. FT.	45'-0"	12¾"Ø	57	2565'-0"
STEEL HEADERS	LIN. FT.	24'-0"	HP14X73	24	576'-0"

TREATED TIMBER					
ITEM	UNIT	LENGTH	SIZE	NO.	TOTAL
TIMBER PILES	LIN. FT.	45'-0"	15"Ø	14	630'-0"
TIMBER WALE	LIN. FT.	24'-0"	12" X 12"	24	576'-0"
TIMBER VERTICAL	LIN. FT.	9'-0"	12" X 6"	96	864'-0"

STRUCTURAL HARDWARE				
ITEM		UNIT	NO.	TOTAL
6 X 19 - ¾"Ø WIRE ROPE	(GALV)	95 LBS/100'	2573'-0"	2445 LBS
¾" CABLE CLAMPS	(GALV)	160 LBS/100	252	403 LBS
⅜" X4" STAPLES	(GALV)	83 LBS/100	192	159 LBS
L3X3X⅜" X2" LG KEEPER	(PAINTED)	120 LBS/100	342	410 LBS
⅞"Ø X 3" BOLTS (A307)	(GALV)	80 LBS/100	3312	2650 LBS
⅞"Ø X 20" BOLTS (A307)	(GALV)	370 LBS/100	576	2131 LBS
⅞"Ø HEAVY HEX NUTS	(GALV)	26 LBS/100	3888	1011 LBS
⅞"Ø STD WASHER	(GALV)	15 LBS/100	3888	583 LBS
⅞"Ø O.G. WASHERS	(GALV)	150 LBS/100	576	864 LBS
PLATE A (⅝" ℙ)	(PAINTED)	104 LBS/EA	12	1248 LBS
PLATE B (½" ℙ)	(PAINTED)	52.2 LBS EA	24	1253 LBS
PLATE C (⅝" ℙ)	(PAINTED)	54.3 LBS EA	24	1304 LBS
PLATE D (⅝" ℙ)	(PAINTED)	104 LBS EA	12	1248 LBS
PLATE E (½" ℙ)	(PAINTED)	51.4 LBS EA	24	1234 LBS
PLATE F (⅝" ℙ)	(PAINTED)	57.4 LBS EA	24	1377 LBS
ANGLE G	(PAINTED)	12.8 LBS EA	114	1459 LBS
PLATE H (½" ℙ)	(PAINTED)	21.6 LBS EA	114	2465 LBS

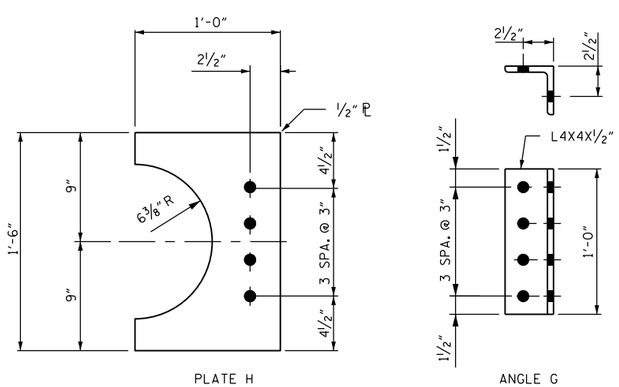

DETAIL C

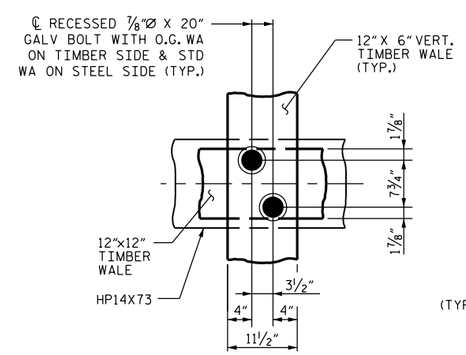

DETAIL D

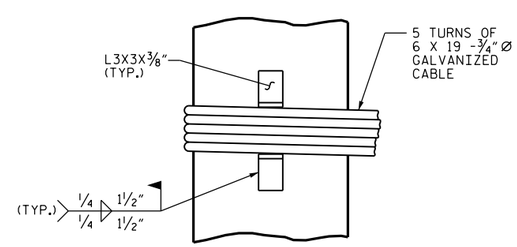

DETAIL E

DocuSigned by:
Paul D. Bryant
7D1BEAE39C3441A...

9/1/2015

NORTH CAROLINA PROFESSIONAL SEAL 23739 ENGINEER PAUL D. BRYANT

PROJECT NO. 41732.8
PERQUIMANS COUNTY
BRIDGE: 14

SHEET 3 OF 3

STATE OF NORTH CAROLINA
DEPARTMENT OF TRANSPORTATION
RALEIGH

FENDER SYSTEM

FENDER SYSTEM DETAILS

REVISIONS						SHEET NO.
NO.	BY:	DATE:	NO.	BY:	DATE:	F-6
1			3			TOTAL SHEETS
2			4			6

DRAWN BY : P. BRYANT DATE : 3-2015
CHECKED BY : W.M. CLARKE DATE : 9-2015

01-SEP-2015 15:50
S:\PRS\POC\Squad C\Fender_Jobs\PERQUIMANS_14_41732.8\P&R_SD_GD_Fender_Rpr.dgn
pbryant