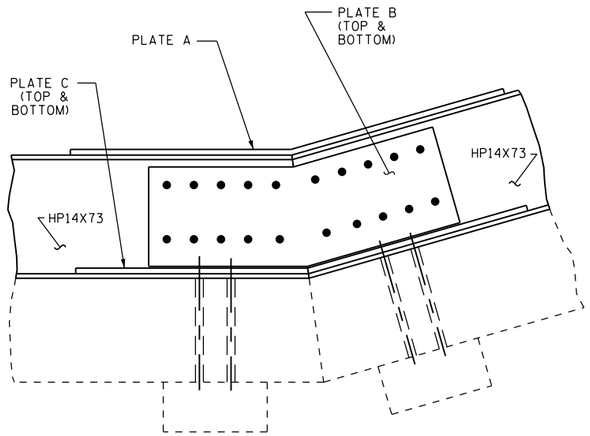

DETAIL A

CORNER SPLICE (12 REQ'D)
PLATE C CAN BE USED FOR BOTH THE UPPER AND LOWER LOCATIONS BY ROTATION

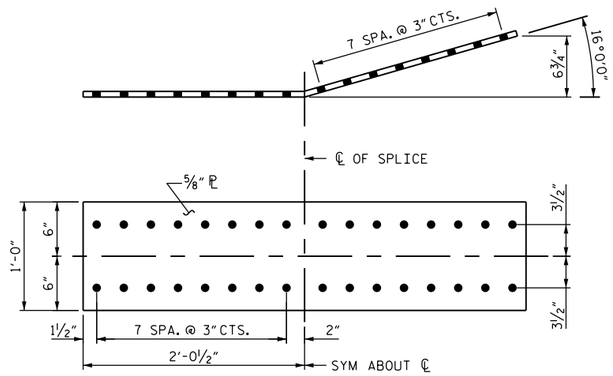

PLATE A

(1 REQ'D @ EA SPLICE)

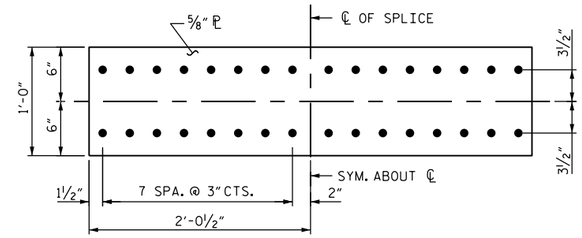

PLATE D

(1 REQ'D @ EA SPLICE)

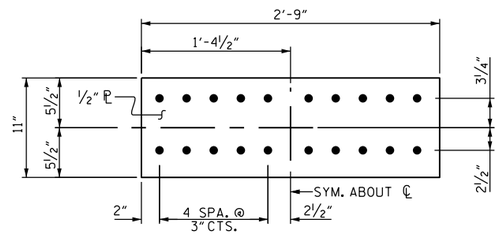

PLATE E

(2 REQ'D @ EA SPLICE)

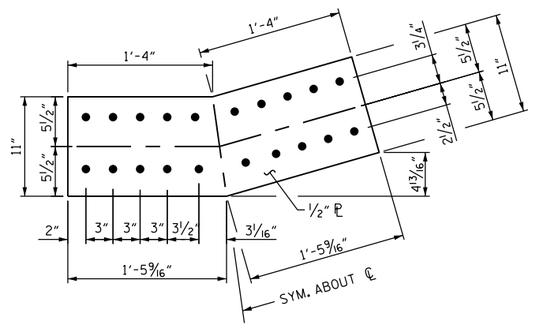

PLATE B

(2 REQ'D @ EA SPLICE)

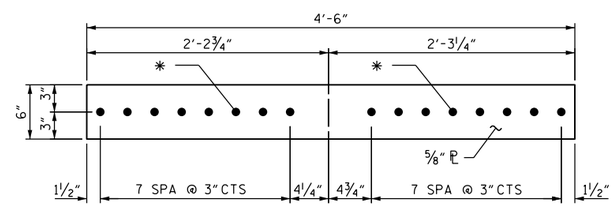

PLATE F

(2 REQ'D @ EA SPLICE)

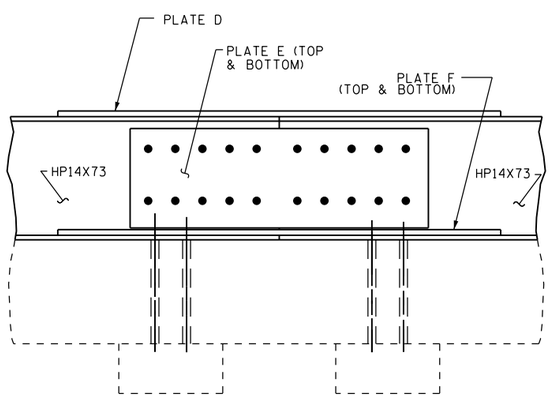

DETAIL B

STRAIGHT SPLICE (12 REQ'D)
PLATE F CAN BE USED FOR BOTH THE UPPER AND LOWER LOCATIONS BY ROTATION

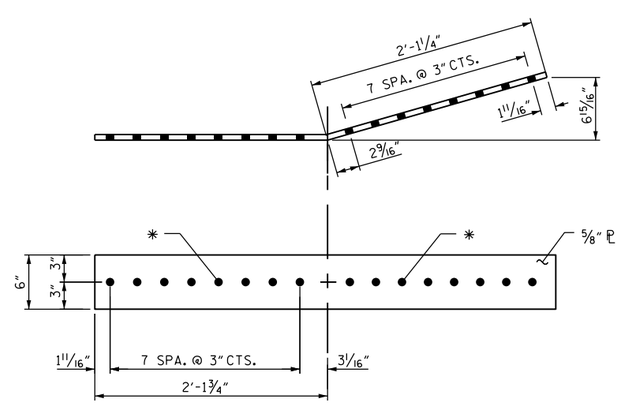

PLATE C

(2 REQ'D @ EA SPLICE)

* TIMBER ATTACHMENT BOLTS INSTALLED IN THIS HOLE.

NOTE: THE CONTRACTOR MAY ELECT TO USE ⅝" ℙ FOR PLATE B AND E AT NO COST TO THE DEPARTMENT.

DocuSigned by:
Paul D. Bryant
7D1BEAE39C3441A...

9/1/2015

NORTH CAROLINA PROFESSIONAL SEAL 23739 ENGINEER PAUL D. BRYANT

PROJECT NO. 41732.8
PERQUIMANS COUNTY
BRIDGE: 14

SHEET 2 OF 3

STATE OF NORTH CAROLINA
DEPARTMENT OF TRANSPORTATION
RALEIGH

FENDER SYSTEM

FENDER SYSTEM DETAILS

REVISIONS						SHEET NO.
NO.	BY:	DATE:	NO.	BY:	DATE:	F-5
1			3			TOTAL SHEETS
2			4			6

DRAWN BY : P. BRYANT DATE : 3-2015
CHECKED BY : W.M. CLARKE DATE : 9-2015

01-SEP-2015 15:12
S:\PRS\POC\Squad C\Fender_Jobs\PERQUIMANS_14_41732.8\P&R_SD_GD_Fender_Rpr.dgn
pbryant