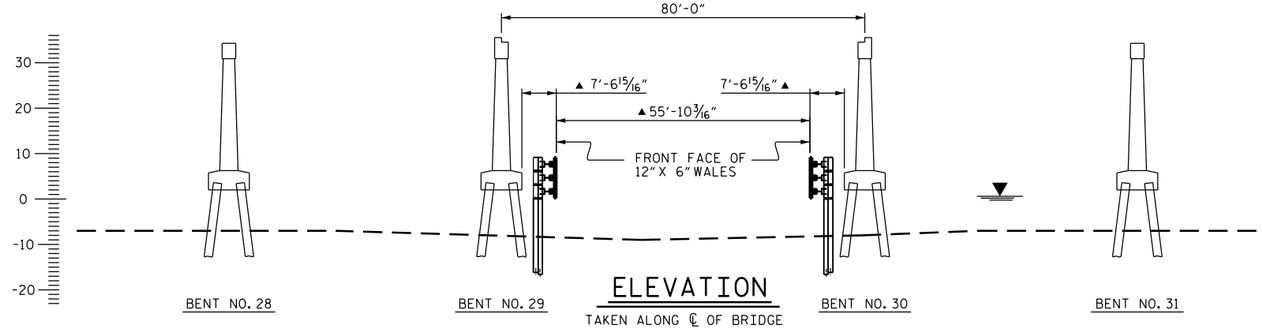

ELEVATION

TAKEN ALONG ℄ OF BRIDGE

TOTAL BILL OF MATERIALS

MOBILIZATION	REMOVAL OF EXISTING FENDER SYSTEM	TREATED TIMBER PILES	HP14X73 STEEL PILES	COATING OF FENDER SYSTEM	12 3/4" STEEL PIPE PILES	12"x6" TREATED LUMBER	12"x12" TREATED TIMBER	HARDWARE
LUMP SUM	LUMP SUM	LIN. FT.	LIN. FT.	LUMP SUM	LIN. FT.	LIN. FT.	LIN. FT.	LBS
LUMP SUM	LUMP SUM	630	576	LUMP SUM	2,565	864	576	22,246

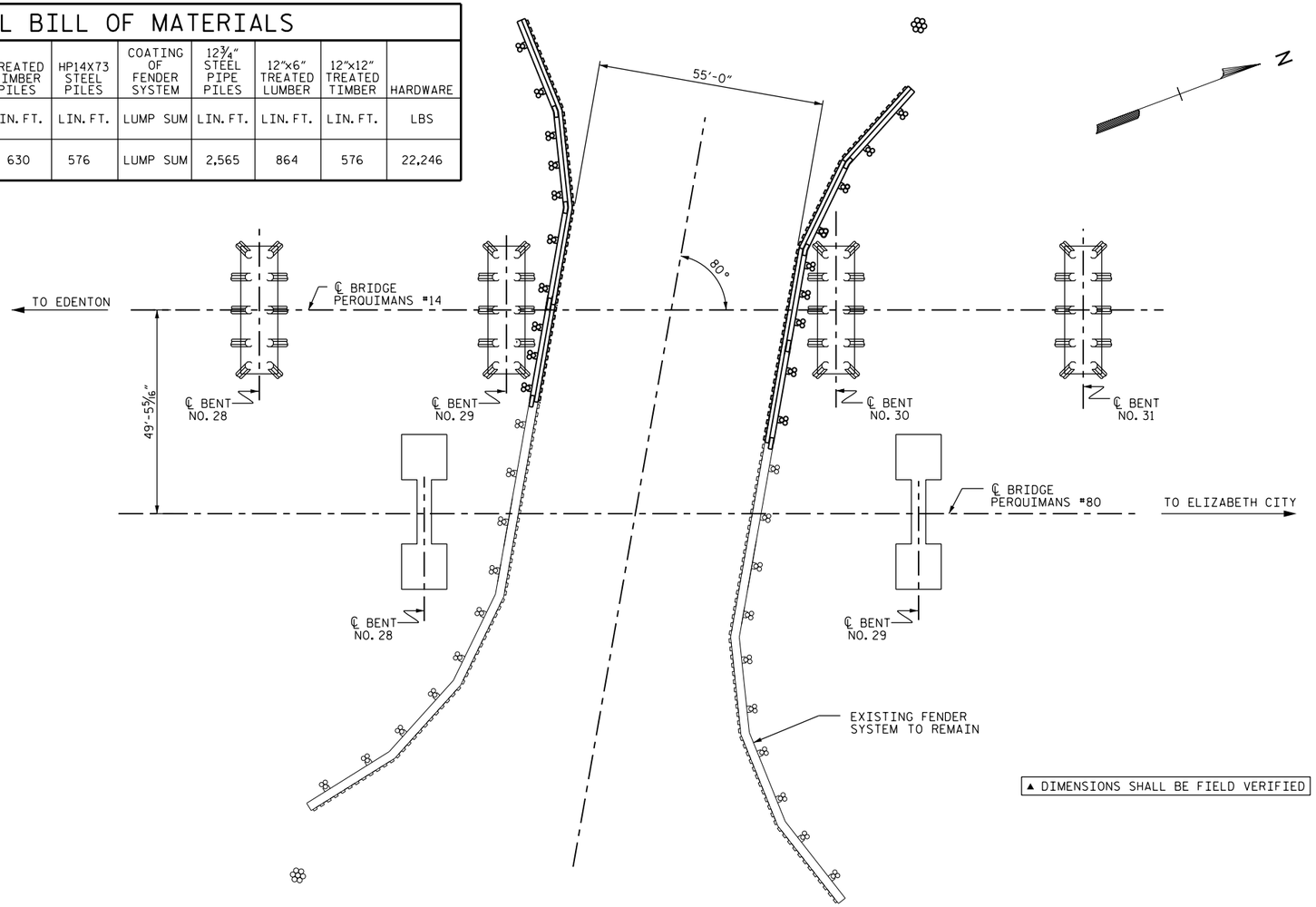

FENDER LAYOUT

▲ DIMENSIONS SHALL BE FIELD VERIFIED

NOTE: THE CONTRACTOR IS ENCOURAGED TO VISIT THE SITE FOR ADDITIONAL INFORMATION ON THE EXISTING FENDER SYSTEM.

GENERAL NOTES:

FOR COORDINATION WITH THE U.S. COAST GUARD, SEE SPECIAL PROVISIONS.

FOR NAVIGATIONAL LIGHTS, SEE SPECIAL PROVISIONS FOR COORDINATION WITH THE U.S. COAST GUARD.

FOR SECURING OF VESSELS, SEE SPECIAL PROVISIONS.

FOR MAINTENANCE OF WATER TRAFFIC, SEE SPECIAL PROVISIONS.

FOR REMOVAL OF EXISTING FENDER SYSTEM, SEE SPECIAL PROVISIONS.

FOR PILE DRIVING EQUIPMENT DATA SUBMITTAL, SEE SUBMITTAL OF WORKING DRAWINGS SPECIAL PROVISION.

FOR SUBMITTAL OF WORKING DRAWINGS, SEE SPECIAL PROVISIONS.

FOR CRANE SAFETY, SEE SPECIAL PROVISIONS.

FOR WORK IN, OVER OR ADJACENT TO NAVIGABLE WATERS, SEE SPECIAL PROVISIONS.

FOR WIRE ROPE FOR FENDER SYSTEM, SEE FENDER REPLACEMENT SPECIAL PROVISION.

FOR STEEL FENDER REPLACEMENT, SEE SPECIAL PROVISIONS.

FOR AS-BUILT PLANS, SEE SPECIAL PROVISIONS.

FOR LOCATION OF NEW FENDER SYSTEM, SEE SPECIAL PROVISIONS.

ALL BOLTS, WASHER, NUTS, AND ALL OTHER HARDWARE SHALL BE GALVANIZED AND SHALL BE GRADE A-307.

GALVANIZING SHALL BE DONE IN ACCORDANCE WITH SECTION 1076 OF NCDOT STANDARD SPECIFICATIONS FOR ROAD AND STRUCTURES DATED JANUARY 2012.

ALL O.G. WASHERS SHALL CONFORM TO ASTM A47 CLASS 30.

ALL TREATED LUMBER SHALL CONFORM TO SECTION 1082 OF THE STANDARD SPECIFICATIONS OR AS NOTED ON THE PLANS.

THE CONTRACTOR SHALL RELOCATE THE CLEARANCE MARKER AT BOTH ENDS OF THE FENDER SYSTEM TO THE LOCATION DESIGNATED BY THE ENGINEER.

THE CONTRACTOR SHALL VISIT THE JOB SITE AND CHECK THE MATERIALS AND THE QUANTITY NEEDED TO COMPLETE ALL THE WORK IN ACCORDANCE WITH THE PLANS, PROJECT SPECIAL PROVISIONS, AND THE NCDOT STANDARD SPECIFICATIONS FOR ROADS AND STRUCTURES DATED JANUARY 2012.

THE CONTRACTOR SHALL BE RESPONSIBLE FOR FULFILLING ALL THE REQUIREMENTS OF THE NCDOT STANDARD SPECIFICATIONS FOR ROADS AND STRUCTURES DATED JANUARY 2012, EXCEPT AS OTHERWISE NOTED ON THE PLANS AND SPECIAL PROVISIONS.

AT LOCATIONS WHERE EXISTING AND PROPOSED PILING COINCIDE, SOME OR ALL OF EXISTING PILING MAY BE REQUIRED TO BE FULLY REMOVED. IF THE EXISTING PILING BREAKS UPON INITIAL EXTRACTION, WITH THE ENGINEER'S APPROVAL PROPOSED PILING MAY BE SHIFTED NOMINALLY TO AVOID BROKEN, EXISTING PILES.

THE PROPOSED FENDER FACE OF NEW FENDER SYSTEM SHALL MATCH THE EXISTING FENDER FACE OF THE EXISTING FENDER SYSTEM. DIMENSIONS SHOWN ON THE PLANS ARE FROM PRELIMINARY FIELD MEASUREMENTS AND SHALL BE FIELD VERIFIED PRIOR TO FABRICATING AND/OR OBTAINING MATERIALS.

ALL BOLTS SECURING TIMBER SHALL BE TIGHTENED TO FULLY ENGAGE THE O.G. WASHER WITHOUT EXCESSIVE CRUSHING OF THE TIMBER FIBERS.

PROJECT NO. 41732.8

PERQUIMANS COUNTY

BRIDGE: 14

DocuSigned by:
Paul D. Bryant
7D1BEAE39C3441A...

9/1/2015

NORTH CAROLINA PROFESSIONAL SEAL 23739 ENGINEER PAUL D. BRYANT

STATE OF NORTH CAROLINA
DEPARTMENT OF TRANSPORTATION
RALEIGH

FENDER SYSTEM

FENDER LAYOUT PLAN

REVISIONS						SHEET NO.
NO.	BY:	DATE:	NO.	BY:	DATE:	F-1
1			3			TOTAL SHEETS
2			4			6

DRAWN BY : P. BRYANT DATE : 3-2015
CHECKED BY : W.M. CLARKE DATE : 9-2015

01-SEP-2015 15:11
S:\PRS\POC\Squad C\Fender_Jobs\PERQUIMANS_14_41732.8\P&R_SD_GD_Fender_Rpr.dgn
pbryant